Federal Public Service
Mobility and Transport
Air Accident Investigation Unit

Air Accident Investigation Unit -(Belgium)
CCN
Rue du Progrès 80 Bte 5
1030 Brussels

Safety Investigation Report

ACCIDENT TO VAN'S AIRCRAFT RV-8A REGISTERED OY-L** AT GRIMBERGEN ON 30 APRIL 2011

Ref. AAIU-2011-6-Grimbergen-OY-L**
Issue date: 10 July 2012
Status: Final

FOREWORD **3**

SYNOPSIS **4**

1 FACTUAL INFORMATION **5**

1.1 HISTORY OF FLIGHT. 5
1.2 INJURIES PERSONS. 6
1.3 DAMAGE TO AIRCRAFT. 7
1.4 OTHER DAMAGE. 7
1.5 PERSONNEL INFORMATION. 8
1.6 AIRCRAFT INFORMATION. 8
1.7 METEOROLOGICAL CONDITIONS. 11
1.8 AIDS TO NAVIGATION. 12
1.9 COMMUNICATION. 12
1.10 AERODROME INFORMATION. 12
1.11 FLIGHT RECORDERS. 12
1.12 WRECKAGE AND IMPACT INFORMATION. 13
1.13 MEDICAL AND PATHOLOGICAL INFORMATION. 13
1.14 FIRE 13
1.15 SURVIVAL ASPECTS 13
1.16 TESTS AND RESEARCH 13
1.17 ORGANIZATIONAL AND MANAGEMENT INFORMATION 13
1.18 ADDITIONAL INFORMATION. 13
1.19 USEFUL OR EFFECTIVE INVESTIGATION TECHNIQUES. 13

2 ANALYSIS **14**

2.1 INVESTIGATION ON THE CRASH SITE 14
2.2 WORKING OF THE ECU WARNING LIGHT 14
2.3 POST-INCIDENT AIRPLANE INSPECTION 15
2.4 ENGINE EXTERNAL INSPECTION AND TEST ON TEST BENCH 17
2.5 ASSESSMENT OF THE LAST MAINTENANCE PERFORMED IMMEDIATELY BEFORE THE ENGINE FAILURE 18

3 CONCLUSIONS. **24**

3.1 FINDINGS. 24
3.2 CAUSES. 24

4 SAFETY RECOMMENDATIONS. **24**

5 ENCLOSURES **25**

5.1 AIRPLANE ELECTRICAL DIAGRAM 25
5.2 ENGINE SCHEMATIC ELECTRICAL DIAGRAM 26
5.3 EXTRACT OF NGK SPARK PLUG MANUFACTURER FAQS 27

FOREWORD

This report is a technical document that reflects the views of the investigation team on the circumstances that led to the accident.

In accordance with Annex 13 of the Convention on International Civil Aviation and EU Regulation 996/2010, it is not the purpose of aircraft accident investigation to apportion blame or liability. The sole objective of the investigation and the Final Report is the determination of the causes, and define recommendations in order to prevent future accidents and incidents.

In particular, Article 17-3 of the EU regulation EU 996/2010 stipulates that the safety recommendations made in this report do not constitute any suspicion of guilt or responsibility in the accident.

Unless otherwise indicated, recommendations in this report are addressed to the Regulatory Authorities of the State having responsibility for the matters with which the recommendation is concerned. It is for those Authorities to decide what action is taken.

The investigation was conducted by S. Laureys and H. Metillon
The report was compiled by H. Metillon

The report was published under the authority of the Chief Investigator.

NOTE:

1. For the purpose of this report, time will be indicated in UTC, unless otherwise specified.

2. ICAO document 9859 “Safety Management Manual” was used to identify the hazard and the consequences related to the accident.

SYNOPSIS

Date and hour of the accident: 30 April 2011 at 13:13 UTC

Aircraft: Van's Aircraft RV-8A

Accident location: Off the airfield EBGB at N 50° 57.407' E 004° 23.744'

Aircraft owner: Private

Type of flight: Private

Persons on board: 1

Abstract:

The engine failed after take-off from EBGB airfield when levelling off at 900ft altitude.
The pilot initiated a 180° left turn but rapidly realized he won't be able to reach the airfield.
He selected a cultivated field on the left hand side of his flight direction and performed a forced landing, leaving the airplane damaged.

Cause(s)

The cause of the accident is a limited loss of control at the end of a forced landing following an engine failure.

The probable cause of the engine failure is a tripping of the ECU (Electronic Control Unit) due to electrical interference generated by the ignition system.

Hazard identified during the investigation [1]

No formal technical standard such as Certification Specification for initial design and/or modification of Annex II aircraft.

Consequence [2]

Engine failure (SCF-PP) and Loss of control at landing (LOC-I).

---

[1] Hazard – Condition or object with the potential of causing injuries to personnel, damage to equipment or structures, loss of material, or reduction of ability to perform a prescribed function.

[2] Consequence – Potential outcome(s) of the hazard

1 Factual information.

1.1 History of flight.

It was the first flight after extensive maintenance and repair performed on the engine. Among other things, the owner had replaced the N°3 cylinder head due to the loosening of the exhaust valve seat, all spark plugs (16) and both high voltage distributor rotors of the ignition system.

The pilot performed the pre-flight check and checked the available fuel quantity. There was around 45 litres of 98 octane unleaded automotive fuel in each tank.

The airplane took off from runway 01 of EBGB around 13.00 UTC and climbed normally with a rate of about 1400 ft/min.

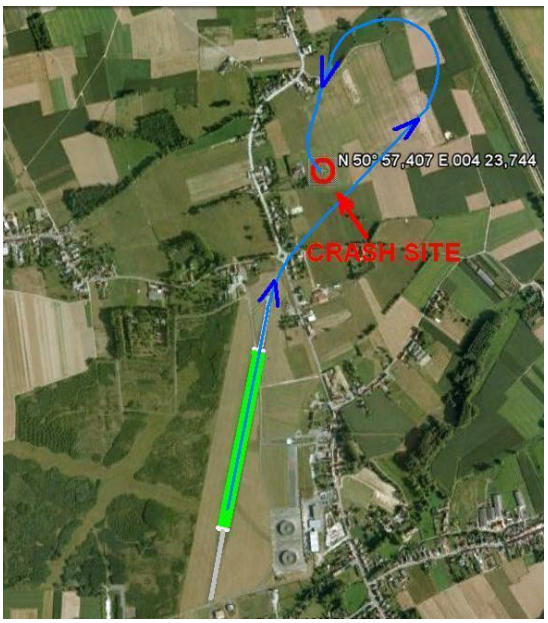

The pilot levelled off at 900ft, reduced the throttle when suddenly the engine ran rough for 5 seconds before stopping.

The pilot initiated a 180° left turn, declaring an emergency on the EBGB airfield frequency.

The pilot then checked the fuel pressure, switched the emergency fuel pump on, swapped fuel tanks without results. He tried also to re-start the engine with the starter, without results.

During the turn, the airplane lost significant altitude and speed.

The pilot then realized he would not be able to reach the airfield and selected a cultivated field on the left hand side of his flight direction to perform a forced landing.

The airplane stalled upon touch down in a 3-point landing on the soft field. The landing was harder than normal, which led to the bending of the nose landing gear, and the airplane stopped after around 10m landing run.

The pilot was properly strapped in, using shoulder harnesses and climbed uninjured out of the airplane.

Before leaving the airplane and switching off all contacts, the pilot noticed the ECU (Engine Control Unit) alarm light was ON.

AAIU(Be) was notified of the accident at 13:58, and was present at the crash site at around 15:00 for the first findings of the investigation and to interview the pilot.

The damaged plane was later moved to a repair station at EBGB.

1.2 Injuries persons.

Injuries	Pilot	Passenger	Others	Total
Fatal	0	0	0	0
Serious	0	0	0	0
Minor	0	0	0	0
None	1	0	0	1
Total	1	0	0	1

1.3 Damage to aircraft.

Figure 1: General view of the A/C and damages to the propeller.

Figure 2: L/H wing leading edge and view of the nose wheel under the engine cowling.

As seen on the above picture the damage is serious and is consistent with a hard landing on a soft field.

The nose landing gear was bent backwards upon impact.

The propeller blades were destroyed and both wing leading edges were crushed near the wing tips by impact with the ground.

However the airplane is likely to be repairable.

1.4 Other damage.

Minor damage to the cultivated land.

1.5 Personnel information.

Pilot:

Sex:	Male
Age:	59 years old
Nationality:	Danish
License:	Private Pilot license delivered by Denmark on 29 June 1999, valid up to 02 November 2011 as per medical certificate.
Ratings:	SEL (VFR day only)
Medical certificate:	Class II, valid up to 02 November 2011.
Pilot's experience:	280 FH total flight experience, mainly using OY-L**, Cessna 152/172 and Piper PA 28. Flight hours per year: around 25 FH.

Owner:
Owner technical background:
As the owner had built and maintained his airplane until the engine failure, it seemed interesting to describe his knowledge and experience in aviation technology. Here is his own description:

Owner (home builder) knowledge and experience in the aviation technology.
I have no formal education concerning airplanes, like most homebuilders I guess, but I have always studied hard about whatever problem that have occurred during the construction of my airplane, and I have always sought the best technical advice I could get through all the years. That has especially been the case with my Danish controller during the construction and also concerning the recent changes to the engine, where I have had close contact with the technician of "Spark Engines", who after all is the designer of the "ULPower" engine, and has the best knowledge of its FADEC system.

1.6 Aircraft information.

Generalities
Van's Aircraft is an American kit aircraft manufacturer founded in 1973.
All Van's RV series are aluminum, low-wing monoplanes of monocoque construction.
The RV series of airplanes has been extremely successful, with 7,497 flying as of December 2011, making the series one of the most numerous of all homebuilt aircraft.
They feature responsive controls plus both good speed and fuel economy.
The RV-8 is a tandem seating concept, with classic landing gear that went on the market in 1996.

In short order, it was followed by the kit for the tricycle gear RV-8A featuring a tricycle landing gear.

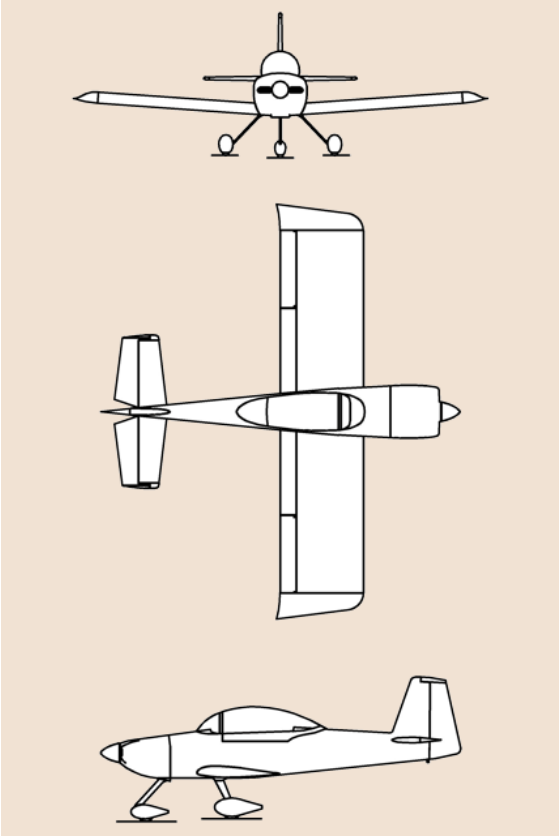

Exterior dimensions
Span: 24 ft
Length: 20 ft 10 in
Height: 7 ft 4 in
Wing area: 116 sq ft
Weight
Empty weight: 1067 – 1120 lbs
Gross weight: 1800 lbs
Power plant system
Engine: 150 – 200 hp
Propeller: fixed or C/S
Fuel capacity: 42 US Gal

Airframe:

Manufacturer:	VAN'S AIRCRAFT. The assembly of the airframe kit and subsequent engine and accessories installation was performed by the owner.
Type:	RV-8A
Serial number:	9711-80374
Manufacturing date:	May 2005
Airplane total time:	122 FH
Registration:	OY-L**
Certificate of registration:	Temporary Certificate of Registration N° M 1454 delivered by CAA Denmark. Valid from 13 March 2010 to 13 March 2012.
Certificate of airworthiness:	General Flight Permit delivered by CAA-Denmark on 16 September 2007.

Engine:

Manufacturer:	JABIRU

Type:	5100 - 8 cylinders engine
Serial number:	51A08
Engine total time:	122 FH

Flight authorization and flight documents
This home built airplane was provided with a valid *"Temporary Certificate of Registration"* and with a *"General Permit to Fly"* whose validity was submitted to conditions.
Among others, we can note the following:

- For flight outside Danish, Finnish, Norwegian and Swedish airspace, the Flight Permit must be validated by the countries which are to be over-flown.
- "A temporary permission to fly over Belgian territory" was issued by Belgian CAA on 12 November 2007 and valid until 11 November 2008.
- The "General Permit to Fly" was delivered by CAA-Denmark on 16 September 2007 awaiting issuance of a "Danish Experimental Certificate of Airworthiness".

Note: The *"General Permit to Fly"* refers to a *"Maintenance programme"* approved on the 21 May 2005 and to a "*Flight Manual"* as approved on the 27 August 2007 by the "Projectudvalg" and as extended by limitation in the test flight program.

Modification and maintenance of the engine
The owner wanted to improve the performance of the "Jabiru" engine and started a modification process. The engine was modified early in 2010 by the removal of both the original carburettors and ignition system and their replacement by a "FADEC" (*Full Authority Digital Engine Control*).
The FADEC is a system consisting of a digital computer, called an "ECU" (*Engine Control Unit*), and its related accessories that control all aspects of aircraft engine performance (Ignition, fuel injection, fuel pump control …).
The electronic engine control (ECU) and associated equipment installed in OY-L** were specifically developed by "Spark Engines" for the airplane owner.
The entire system originated from automotive technology and showed a lot of similarities to the one installed on "ULPower" engine.
However, the "Jabiru" high tension distributors remained in service while "ULPower" ignition system doesn't need a high tension distributor.
Additionally, the distributor design was improved at the time of the engine alteration by replacing the rotor shaft bushings by roller bearings.
The new design and the needed parts originated from the engine manufacturer JABIRU.

When the FADEC system was installed, the original ignition cables, using carbon as conductor, were considered unsatisfactory and were replaced by copper high tension cables.
The engine was installed on the test bench of “Spark Engines” in order to set the mapping of both the ignition and fuel injection. At the end of the mapping and after some satisfactory power tests, but no endurance tests, the engine was released to the owner.
The engine installation in the airplane, including the alteration of the airplane’s electrical circuit was made by the owner in close cooperation with “SparkEngine”. (A copy of the electrical scheme is enclosed at the end of the report).
The airplane flew the first time with the new FADEC System on 18 July 2010 and thereafter performed 14 FH satisfactory.
Early in 2011, the owner performed some maintenance tasks consisting among others the replacement of:

- The cylinder head number 3, due to a loose exhaust valve seat
- The rotors of both distributors, due to slack at assembly on the shaft
- The 16 spark plugs

The new cylinder head and the rotors of the distributors were genuine parts coming from the engine manufacturer “Jabiru” The newly installed spark plugs were NGK D9EA without internal resistor (as prescribed by the engine manufacturer), while the removed ones were optional Iridium NGK DR9EIX, incorporating internal resistor.
After the above replacements, the engine was tested on the ground and found satisfactory.

<u>Agreement between the owner and “Spark Engines”</u>
As said above, the airplane owner was not satisfied of the working of its engine and wanted to improve it. Therefore he looked for a specialist able to help him to modernize the engine and made contact with the company “Spark Engines”.
This company was very busy and was not interested to alter a “Jabiru” engine. “Spark Engines” informed the owner that such a modification required not only the time necessary to perform the modification but also a lot of endurance tests before being installed safely in an aircraft.
However, the airplane owner insisted near to the company to do this alteration.
Finally, “Spark Engines”, after having informed the owner that they could not perform the necessary intensive endurance tests, accepted to modify the engine.

1.7 Meteorological conditions.

Not relevant: flight conditions were obviously acceptable for VFR flight.

1.8 Aids to navigation.

Not applicable

1.9 Communication.

A normal communication was established with “Grimbergen Radio” before the airplane started to taxi and before the take-off.

When the engine stopped operating, the pilot immediately declared an emergency on the frequency of “Grimbergen Radio”.

1.10 Aerodrome information.

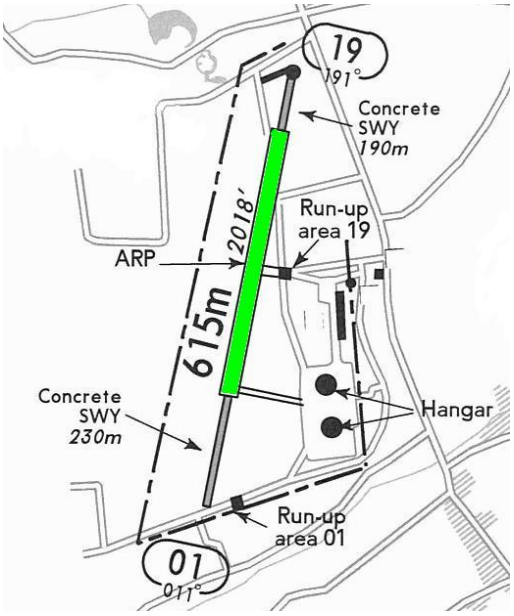

EBGB airfield is located at N 50 56 58 - E 004 23 36, 1,8 NM north west from the city of Vilvoorde. The elevation of the airfield is 69 ft / 21m and it is equipped with a 615 m long – 30 m wide grass runway oriented 01/19. Maximum strength is 3000 kg. The runway 19 is provided with a 230 m long concrete SWY while the 01 runway features a 190 m long concrete SWY.
Both circuits are east of the runways at an altitude of 800 ft AGL (Left hand circuit for 19 runway and right hand for 01 runway).

The aerodrome is provided with a Flight Information Service (AFIS) called "Grimbergen Radio" - 119.50 MHz (Information only, no ATC).
The use of the airfield is subject to prior permission from the operator.

1.11 Flight recorders.

Not installed, nor was it required. (Note: the engine ECU system does not incorporate any memory).

1.12 Wreckage and impact information.

At first sight, the possibility existed to perform a soft forced landing. However, as seen on the above pictures (Figures 1 and 2) the airplane suffered a loss of control close to the ground causing significant damage to the airplane (Nose landing gear, wing leading edges, propeller …). Both propeller blades were broken.
First investigation on the crash site showed that there was enough fuel inside both fuel tanks.

1.13 Medical and pathological information.

Not applicable

1.14 Fire

There was no fuel leak and no fire.

1.15 Survival aspects

Obviously the crash was survivable for properly strapped in occupants.

1.16 Tests and research

Not applicable.

1.17 Organizational and management information

Not applicable.

1.18 Additional information.

Particular interest for the investigation:
This airplane is a home-built aircraft, belonging to the Annex II to EC 216/2008, for which there is no obligation to investigate as per EU 996/2010. However, AAIU(Be) has investigated in the past an accident involving an engine equipped with a similar FADEC system, which stopped abruptly at take-off. Due to the fire that destroyed entirely the airplane, the investigation could not determine the cause of the engine failure with certainty. AAIU(Be) had therefore a special interest in the technical aspects of incidents / accidents involving propulsion failure of aircraft having a similar FADEC System and associated equipments.

1.19 Useful or effective investigation techniques.

NA

2 Analysis.

2.1 Investigation on the crash site

When arriving on the crash site, all the switches inside the cabin were found set to OFF and the fuel pump switch was found on “Fuel pump 1”. The upper engine cowling was removed and the positive battery cable had been disconnected from the battery, for safety reasons.
The fuel quantity was checked and it was determined there was fuel enough in both fuel tanks to properly feed the engine. According to the owner’s declaration; there was around 45 to 50 litres unleaded automotive fuel on board.
First investigation on the crash site, incorporating a careful inspection of the engine’s exterior, did not show any visible anomalies on the engine.

The pilot was interviewed, as mentioned in chapter 1.1.

The day after the accident, the airplane was moved to EBGB for further investigation.

2.2 Working of the ECU warning light

Before leaving the airplane and switching off all contacts, the pilot noticed the ECU warning light was ON.

The ECU warning light goes ON when the ECU detects an anomaly to one of the following sensors or related wiring: oil temperature, air temperature and Throttle Position Sensor.

The ECU warning light also goes ON when the electrical feed of the ECU is interrupted while the ECU alarm light remains under tension.

As seen on the enclosed “Airplane Electrical Diagram” and “Engine schematic electrical diagram”, the ECU warning light is permanently connected to the +12 volts bus bar independently from the +12 volts feeding of the ECU.

The entire electronic system of the ECU and the related sensors are working under an electrical tension of 5 volts. Therefore there is an internal 5 volts supply inside the ECU.

2.3 Post-Incident airplane inspection

The airplane was inspected in the facility of Euro-Sky Grimbergen NV in EBGB on 19 May 2011.

Besides the two investigators of AAIU(Be), the ownerwas present and also representatives of the company who performed the engine alteration (Spark Engines). A representative of “UL Power” was also present (as this type of engine is sharing a similar type of Electronic Engine Control).

Of all the sensors triggering the ECU warning light the Throttle Position Sensor (TPS) is the only one able to significantly alter the engine performance.
Therefore we first connected this sensor to the computer to test its function. When changing the setting of the throttle lever, the output signal was reacting normally between the pre-defined limits. With full throttle, the program gave a maximum voltage output; with the engine throttle on idle, it gave a minimum voltage output. When moving and pulling the sensor wires, the value of the output voltage remained constant, from which it can be concluded that the system worked adequately.

The air filter was removed and the operation of the throttle valve was visually checked, also with no adverse findings.

All the spark plugs were removed and were found in very good condition, and very clean (No trace of combustion or fumes deposit) as if they were new. It was confirmed by the owner that they were new.

When rotating the propeller hub, all the pistons and all the valves were seen moving, indicating there was no obvious internal damage to the engine.

The ignition system has been tested in two phases. First, the high tension cables of the 2 ignition coils were disconnected from the distributor and positioned close to the mass. The second inspection consisted of removing one spark plug of each cylinder and connecting them with the mass. When using the starter to turn the engine, high-voltage sparks could be seen in both cases, concluding that the ignition system fed by the ECU still worked properly and that the battery was in good condition.

The fuel pump 1 ran normally during 2 or 3 seconds when the master switch was set ON and then stopped, which is normal if the engine doesn’t start immediately.

Both fuel pumps were tested separately by removing the stop end fitting of the fuel manifold. In both cases, the pump delivered a constant fuel flow towards the injection system. There was obvious fuel pressure present but it could not be measured.

The engine was provided with two separated exhaust silencer system, one for each cylinder row. It has been determined that both exhaust silencers were free of obstruction.

The fuel tank selector working was examined and it was determined that it was impossible for the pilot to switch it into the OFF position by mistake.

The design of the Instrument Panel showed that the engine electrical controls and switches were located on the right side of the Instrument Panel, close to the right hand flange of the fuselage. The master switch, the ECU red warning light, the two ignition switches and the starter button were installed close together.
It is unlikely that the pilot missed seeing the red warning light of the ECU when he pushed the start button and during the run up before taking off.

The electrical system related to the FADEC, i.e. the ECU, the fuel pumps, the coils, the electrical loom and the electrical connections were closely examined. No visible anomaly was found.

It was then decided to send the entire engine, including the FADEC system, to “Spark Engines”.

After the engine removal, the entire wiring circuit of the ECU inside the airplane, i.e. the feeding wires (positive and the mass), relays …were assessed when carrying a high rate of current.
A number of Automotive glow plugs were progressively connected at the ends of the feeding wires of the ECU in order to simulate the maximum peak of the ECU electrical consumption. Tests were performed up to a maximum current of 26 amps, using the entire airframe electrical circuit. With 26 Amp consumption, the voltage of the battery was measured as being 11,95 volts while the voltage at the other extremity of the electrical circuit was 11,38 volts. The voltage drop was very low whatever the current being drawn was.
During the tests, both the master relays and the cockpit panel were tap tested for detecting any possible bad contact, but no anomaly was found. The entire circuit was also finger felt to detect possible overheating of a component or a wire.
No anomaly was found in the feeding circuit of the ECU.

2.4 Engine external inspection and test on test bench

The engine has afterwards been tested twice on a test bench in the facility of Spark Engines. However, each engine test was limited to a few minutes to avoid exceeding the maximum oil temperature (the test bench oil cooler was not able to properly cool the engine oil).

The first test was done using only an external battery, not connected to a charging system, to feed the (original airplane) ECU. The engine started easily and ran for several minutes for different regimes and loads. No failures could be observed.
Then, the Throttle Position Sensor (TPS) was disconnected and the engine was restarted showing it was able to run, but roughly, for different throttle settings.

A few weeks later, a second test of the engine was done using an electrical feeding circuit as similar as possible to the one installed in the airplane to feed the ECU (own engine alternator and similar rectifier-regulator + external battery). Like the preceding test, the engine ran for several minutes at different regimes and loads without revealing any particular anomaly. Engine went up to maximum RPM in order to check for possible over-voltage and/or bad rectification of alternate current coming from the alternator that could have significantly degraded the internal electrical feeding circuit of the ECU.

Additionally, during this second test pressure and traction was applied on all the connectors, sensors and electrical wires to assess possible bad electrical contact. The ECU was also tap tested to detect possible false contacts.

A fault in the crankshaft position sensor or its connection was also considered as being a possible cause of the engine failure and therefore was also investigated. However, it was determined as being very unlikely as the engine ran perfectly on the test bench with the original sensor and wiring. Additionally, as the crank sensor is a Hall-effect sensor it was determined that an intermittent complete failure was also not likely to occur.

An internal electronic intermittent ECU failure was also considered as being a potential cause for the engine failure. This possibility could not be excluded however it was considered by Spark Engines as less probable due to the extreme reliability of this type of component.

2.5 Assessment of the last maintenance performed immediately before the engine failure

No anomaly was found during the inspection and the assessment of both the airframe fuel and electrical systems. Additionally, as seen above, the various engine test runs did not allowed reproducing the engine failure.

The hypothesis of an unintentional switching off of the engine by the pilot was rejected.

Therefore we found interesting to continue the investigation from another direction, taking into account that the engine failure occurred immediately after the owner had performed some maintenance tasks on the engine.

The maintenance tasks performed before the engine failure consisted among other things the replacement of:

- Cylinder head number 3, due to a loose exhaust valve seat
- Rotors of both distributors, due to slack at assembly on the shaft
- All 16 spark plugs.

Note: As far as we know, the "*Maintenance Program"* as approved on 21 May 2005 was not amended nor approved by CAA Denmark after the engine/airframe alteration (FADEC installation).

Cylinder head number 3

The possibility of a mechanical problem involving the cylinder head number 3 was rejected because an intermittent cylinder head failure, as for example a valve sticking, could not lead to complete engine failure, which was confirmed later by normal engine function on the test bench.

High tension rotors

Therefore, we focused our attention on the new high tension rotors.

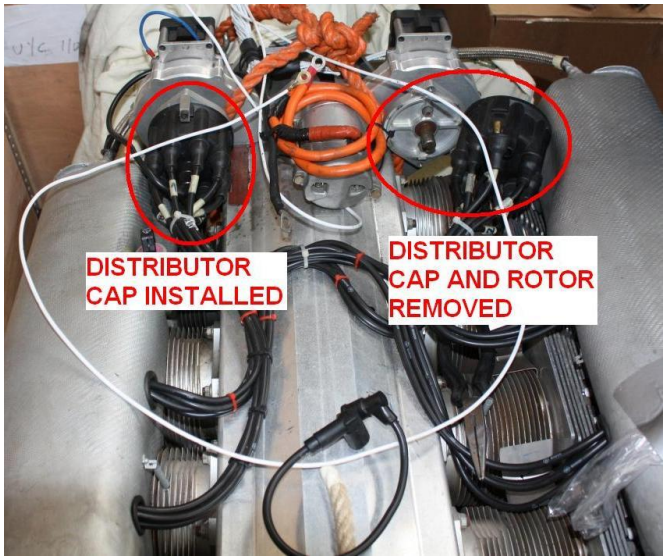

We removed both distributor caps and we found that there was no clearance between the new rotors and the distributor caps.
Consequently, the rotors were damaged and the carbon brush of each distributor was blocked inside its housing due to the friction (see figures 4 and 5).

Figure 3: view of the high tension distributors

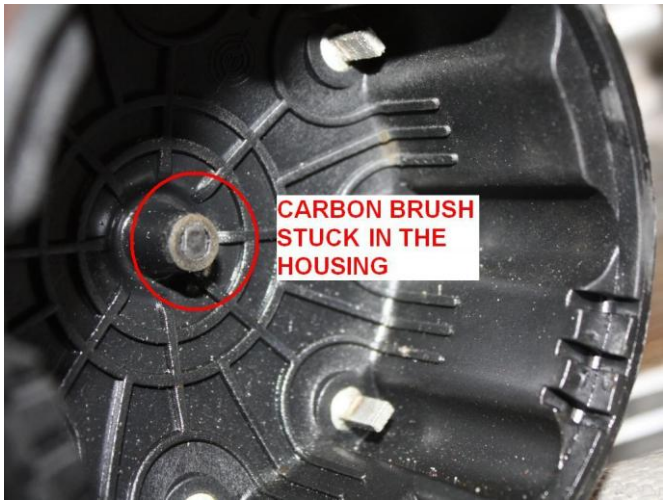

Despite the damage, the distributor caps and the rotors were yet functional and could not explain a sudden and complete engine failure.
However, it is likely that sooner rather than later this would have result in a partial or complete failure of the ignition system.

Figure 4: Inside of a High Tension distributor cap

This anomaly was probably not the cause of the engine failure and therefore we didn't investigate the actual cause of the inadequate positioning of the rotors.

Figure 5: Friction traces on a practically new rotor

Spark plugs

The recent replacement of the spark plugs, at first sight, had no relationship with the engine failure. However, looking further, we found that the new type of spark plugs was not the same than the one installed before the engine failure.
Actually, the newly installed spark plugs were NGK D9EA while the old spark plugs, used before the engine modification and also during the first 14 flight hours post modification, were NGK DR9EIX.
The owner explained why he decided to install NGK D9EA instead of the previous NGK DR9EIX.

Aircraft owner explanation about its spark plug type choice:
The newly installed spark plugs NGK D9EA are the ones originally recommended by "Jabiru" for the engine.
The old ones NGK DR9EIX were more expensive iridium spark plugs, but it was not necessary to have those plugs. I only used them because they were supposed to last longer and the old EGT sensors were rings below the plug which often broke when I unscrewed the plugs.
But the new EGT sensors from the company Spark Engines were different and not anymore installed underneath the plugs, so there was no more need for using longer lasting and more expensive spark plugs.

As the engine performed without problem the first 14 flight hours since the installation of the FADEC system using NGK DR9EIX spark plugs, we found it interesting to compare the main characteristics of both spark plugs types.

- NGK D9EA spark plug is part of the "V-Power" family. The "V Power" family is the typical common spark plug type. (Note: Suffix "A" in the model number means special design).
- NGK DR9EIX is part of the "Iridium IX family". The "Iridium IX" family offers (following NGK documentation) extreme ignitability, improved throttle response and superior anti fouling. (Note: The letter "R" means "Resistor Type" while suffix "IX" means "High Performance Iridium").
- An interesting difference between both types of spark plug is the absence of resistor inside the newly installed NGK D9EA.

Note: The spark plug manufacturers use a resistor in the spark plugs to suppress (or mitigate) ignition noise generated during sparking. Additionally, neither type of (automotive) spark plug was shielded as are the traditional aviation spark plugs – See enclosed, at the end of the report, an extract of the NGK web site concerning the use of resistor spark plugs.

We looked in detail the ignition system from the coil to the spark plugs to assess how possible electromagnetic interferences generated by the ignition system were mitigated.

PART	PROTECTION
High tension cap on coils	**With resistor**
High tension cables from coils to distributors	Copper cables non resistive and not shielded
High tension coil cable caps onto distributors	Non resistive
High tension distributor rotors	Non resistive
High tension spark plugs cable caps onto distributors	Non resistive
Spark plug high tension cables	Copper cables non resistive and not shielded
Spark plug caps	**With resistor**
Spark plugs	Non resistive and not shielded

As seen on the above table, resistors were only installed at both ends of the ignition system, on the coils and on the spark plugs but nowhere else.

During the investigation, “Spark Engines” explained that normally the ECU box and the entire ECU loom were shielded to avoid possible perturbations of the working of the ECU caused by interference coming from the ignition system (or from any interference source).

By looking in detail at the ECU loom of OY-L**, we noticed that the both plus and minus feeding wires of the ECU were not shielded.

Figure 3: example of shielded wire

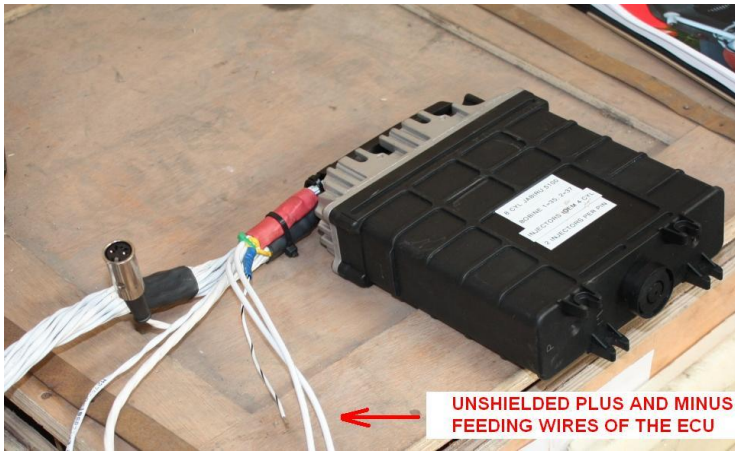

Figure 4: ECU box and loom

Therefore the possibility exists that the unshielded wires of the ECU worked as antennas, picking up electrical interference, causing the ECU to trip.

Later we asked the owner why the plus and minus wires to the ECU were unshielded wires. Here is the reason:

Aircraft owner explanation about the use of unshielded wires to feed the ECU *During the whole installation and design of the electrical system, I consulted closely with "Spark Engines". They said that they used shielded wires, but due to the higher current of the system for my engine than for the small "ULPower" engines, I had to use a no. 10 wire, so I tried to get a shielded no.10 wire from Van's Aircraft, from Spruce Aircraft and from a third American company, but they did not have such a thick wire that was shielded. We discussed if I should use 3 smaller shielded wires that was twisted together, but I didn't really like that since one no. 10 wire seemed more secure for this important power supply. That was probably a mistake, but I had sought the best advice I could get.*

We examined and compared the OY-L** engine and the ULPower engine concerning the possible broadcasting of electromagnetic interference by the ignition system.
We found that the OY-L** installation was most likely to generate and to pick up interferences:

- ULPower engine uses "Resistor" spark plugs while OY-L** used non resistor spark plugs.
- ULPower engine uses 8 spark plugs while OY-L** used 16 spark plugs (8 cylinder engine).
- ULPower engine doesn't feature high tension distributors and rotors, involving the absence of interferences inherent to this type of device.
- ULPower engine ECU supply wires are shielded while the OY-L** plus and minus supply wires are unshielded.

Obviously, the above suppositions are not proved as we could not reproduce the phenomenon during testing on the test bench.

However the consequence of electromagnetic interference depends not only on the source and level of the interference but also on the surrounding environment where the interferences is produced. Differences as for example the position of the ECU on the test bench, the length and position of the ECU supply wires, the presence or not of a firewall, the presence or not of cowling could explain why the engine failure did not occur on the test bench.

For information, the EASA CS-E Regulation, used for Normal, utility, aerobatic and Commuter Aero plane engines but not for home built aircraft engines states the following:

CS-E 135 Electrical Bonding
(See AMC E 135)

Any components, modules, equipment and accessories that are susceptible to or are potential sources of static discharges or currents from electrical Faults, must be designed and constructed so as to be grounded to the main Engine earth, as necessary to minimise the accumulation of electro-static or electrical charge that would cause:

- Injury from electrical shock,
- Unintentional ignition in areas where flammable fluids or vapours could be present,
- Unacceptable interference with electrical or electronic equipment.

3 Conclusions.

3.1 Findings.

- The airplane was airworthy for VFR flights except that the temporary permission to fly over Belgian territory was not renewed since 11 November 2008 (This permission is required for Annex II aircraft registered in foreign countries).
- The pilot held a valid ICAO PPL (private pilot license) with Aeroplane Single Engine Land class rating.
- The engine was recently modified to incorporate a FADEC system replacing the original carburettors and ignition system.
- During the engine modification process, the engine was tested on a professional test bench only for the purpose of setting up the ignition and fuel injection parameters. No endurance test was performed.
- The engine failure occurred shortly after the first take off consecutive to some maintenance tasks performed by the owner.

3.2 Causes.

The cause of the accident is a limited loss of control at the end of a forced landing following an engine failure.
The probable cause of the engine failure is a tripping of the ECU (Electronic Control Unit) due to electrical interference generated by the ignition system.

Contributive factors:

1. The owner (home builder) knowledge and technical education was not sufficient to cope with all possible aspects of the engine design modification.
2. The decision to perform limited engine tests (in flight) instead of extensive endurance tests on ground.
3. No formal technical standard such as Certification Specification for initial design and/or modification of Annex II aircraft.

4 Safety recommendations.

Recommendation 2012-P-10 to BCAA

AAIU(be) recommends BCAA to use the present report to convince home builders interested in the alteration of a engine design that this task is something complex requiring:

- Specific competences, likely to be found in a team of few different individuals.
- Endurance testing, first on a test bench and thereafter in an aircraft.

5 Enclosures

5.1 Airplane electrical diagram

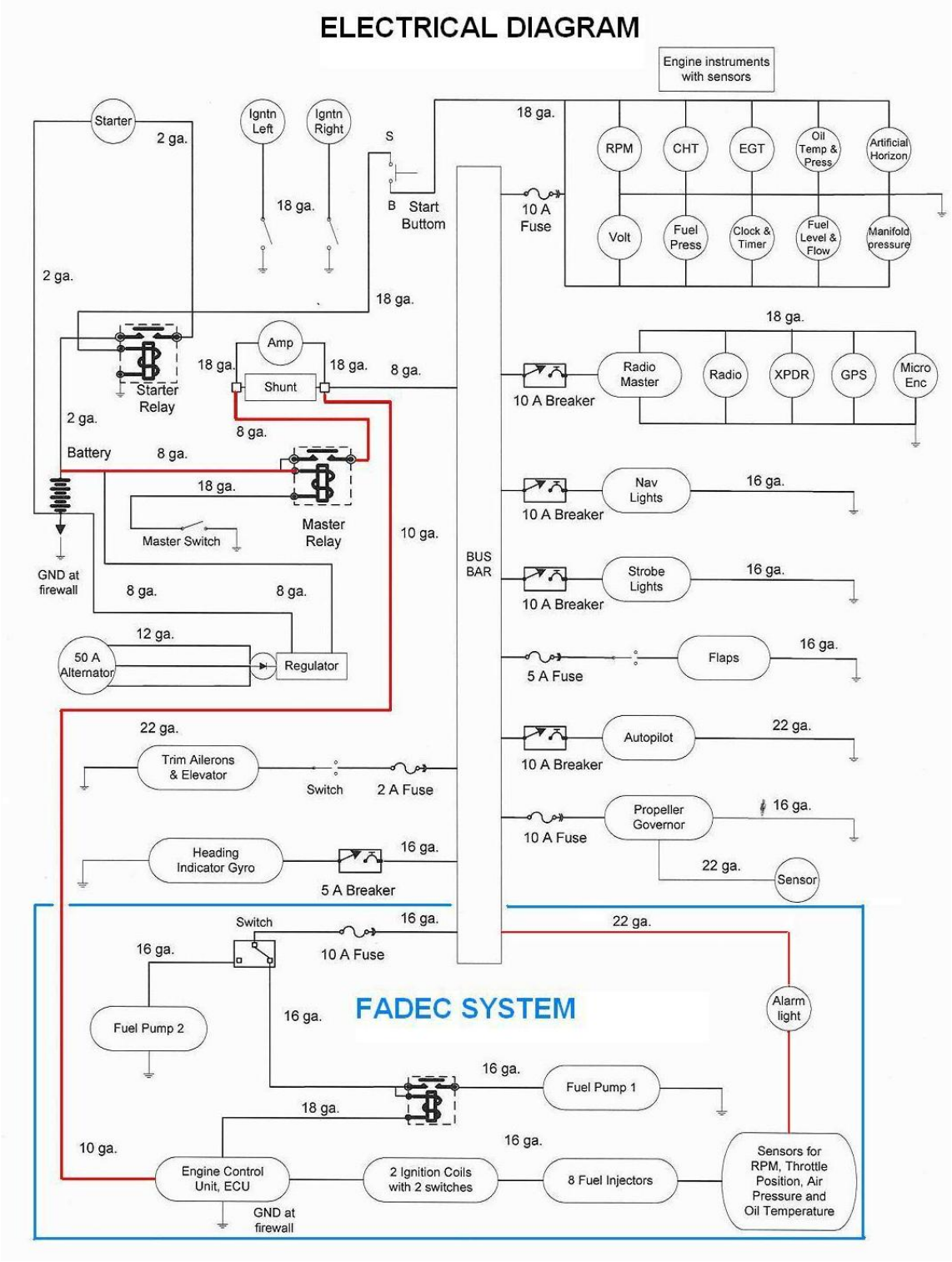

5.2 Engine schematic electrical diagram

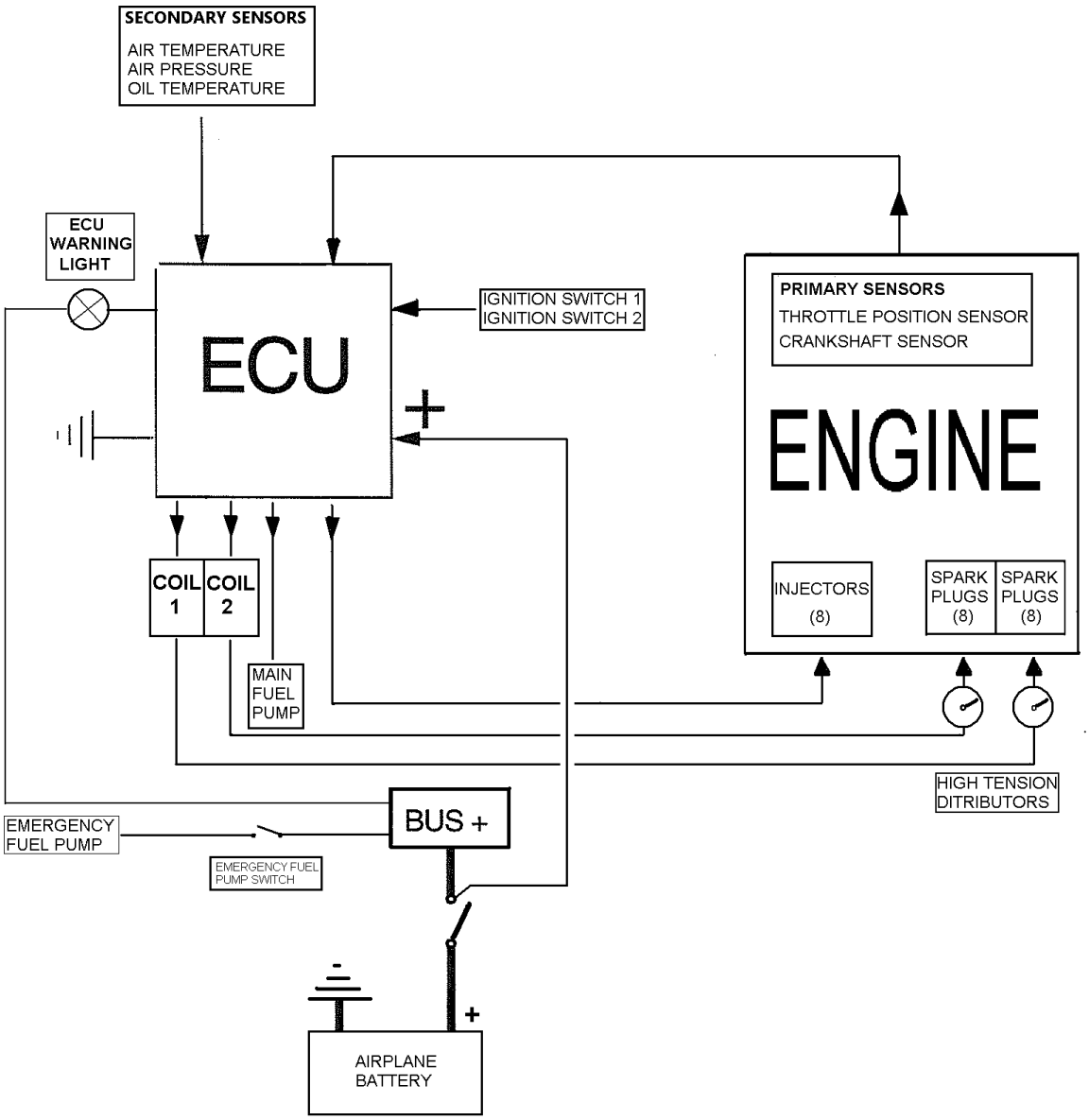

5.3 Extract of NGK spark plug manufacturer FAQs

Q: When should I use a resistor spark plug?

NGK "R" or resistor spark plugs use a 5k ohm ceramic resistor in the spark plug to suppress ignition noise generated during sparking.

NGK strongly recommends using resistor spark plugs in any vehicle that uses on-board computer systems to monitor or control engine performance. This is because resistor spark plugs reduce electromagnetic interference with on-board electronics.

They are also recommended on any vehicle that has other on-board electronic systems such as engine-management computers, two-way radios, GPS systems, depth finders or whenever recommended by the manufacturer.

In fact, using a non-resistor plug in certain applications can actually cause the engine to suffer undesirable side effects such as an erratic idle, high-rpm misfire, engine run-on, power drop off at certain rpm levels and abnormal combustion.

Air Federal Public Service Mobility and Transport ım)
Air Accident Investigation Unit
1030 Brussels

Phone: +32 2 277 44 33
Fax: +32 2 277 42 60

air-acc-investigation@mobilit.fgov.be
www.mobilit.fgov.be